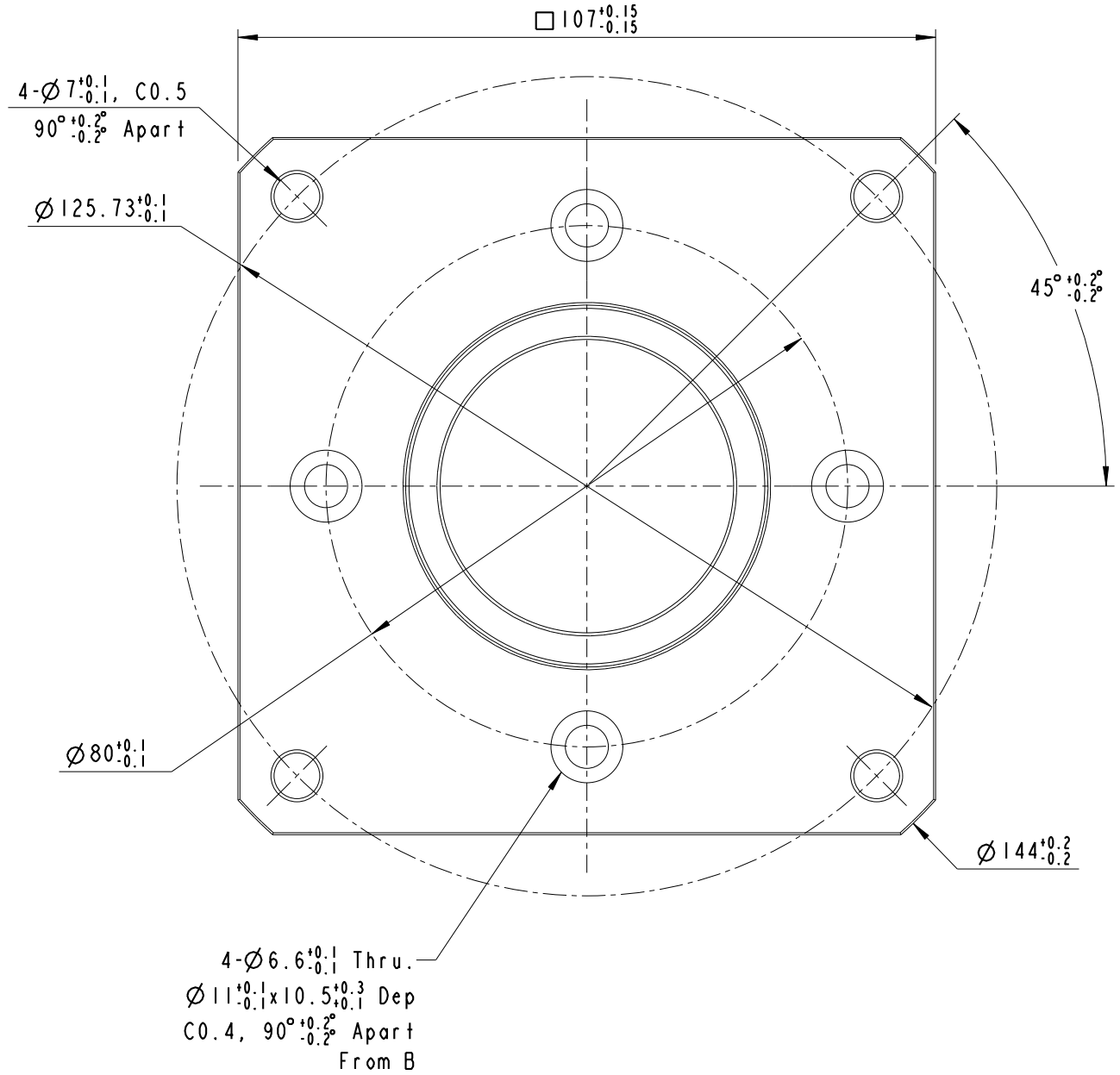

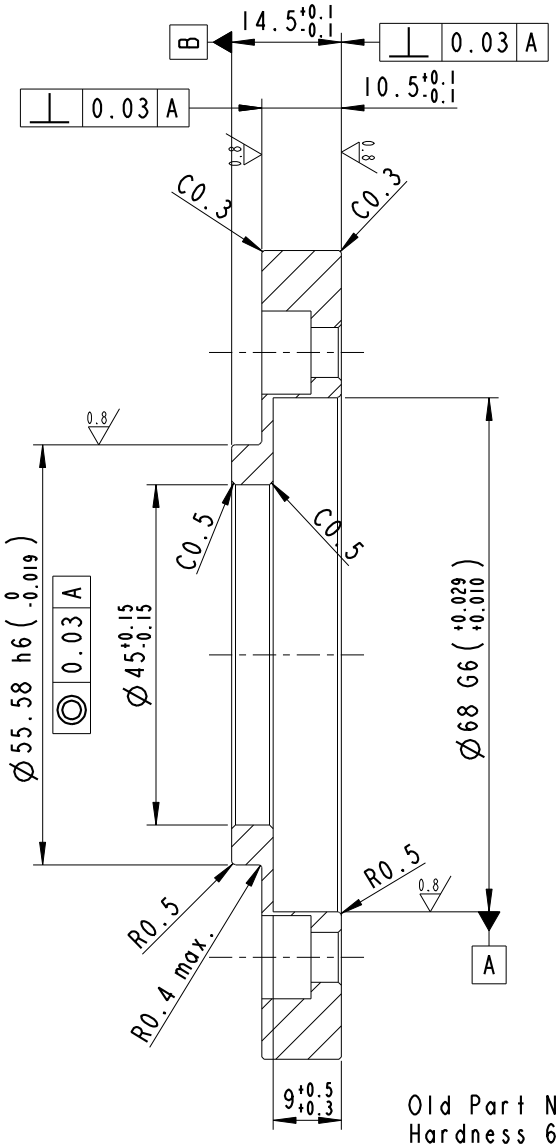

Old Part No.PF130002
Hardness 60±5 HRB
Mass= 0.225 Kg

PART NO.		APEX DYNAMICS, INC.
APPROVALS	DATE	TITLE AE090-NEMA 42
DRAWN Nadia		
CHECKED		DWG NO. P1110300002
APPROVED		SIZE A4 / SCALE 1:1 / REV