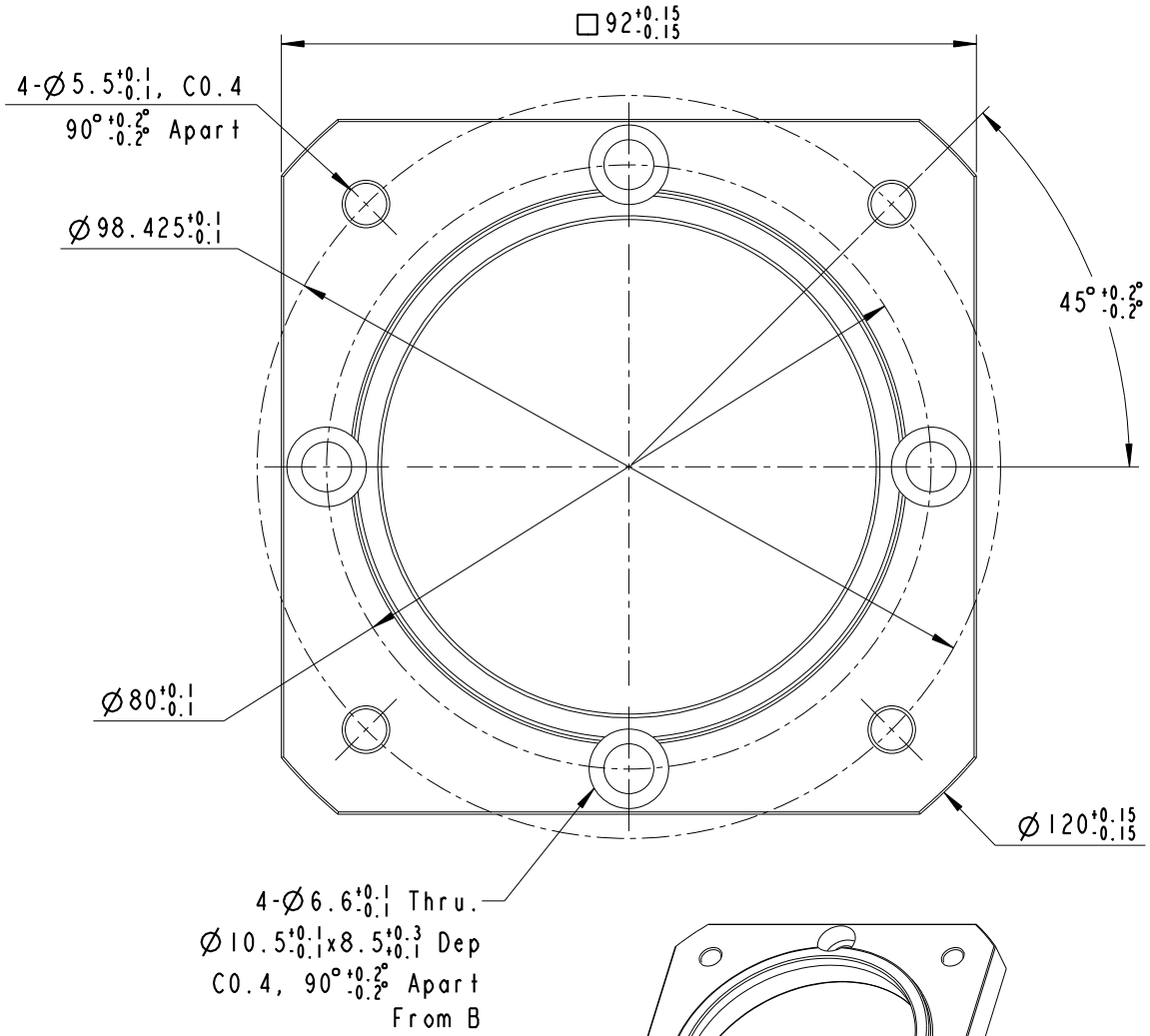

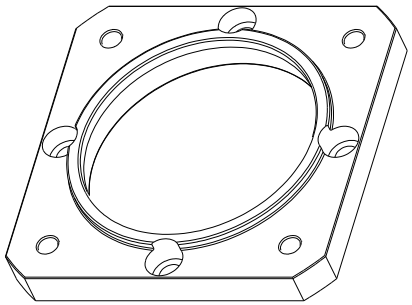

SCALE 1:2

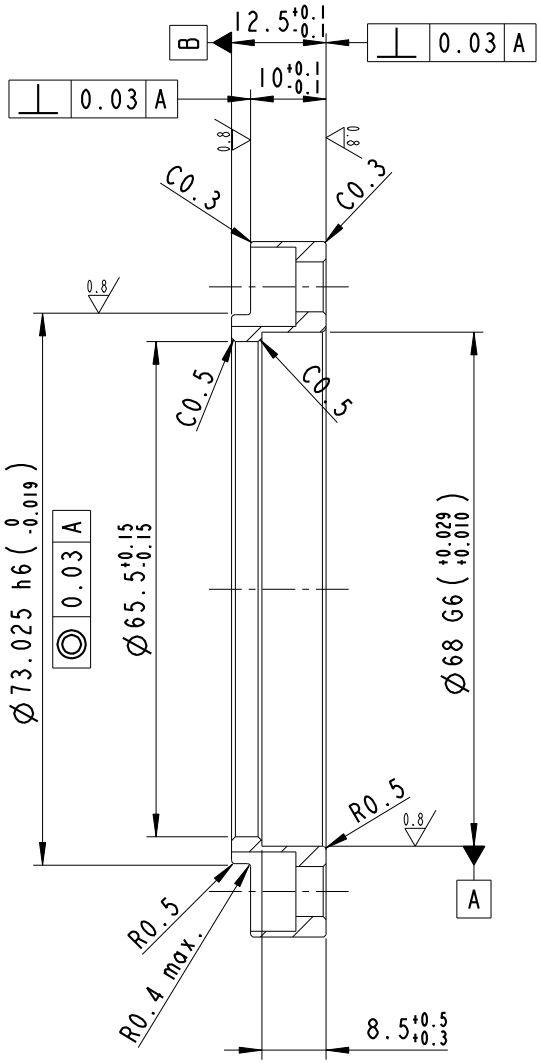

Old Part No.PF130003
Hardness 60±5 HRB
Mass= 0.124 Kg

PART NO.		APEX DYNAMICS, INC.
APPROVALS	DATE	TITLE AE090-NEMA 34
DRAWN Nadia		
CHECKED		DWG NO. P1110300003
APPROVED		SIZE A4 / SCALE 1:1 / REV