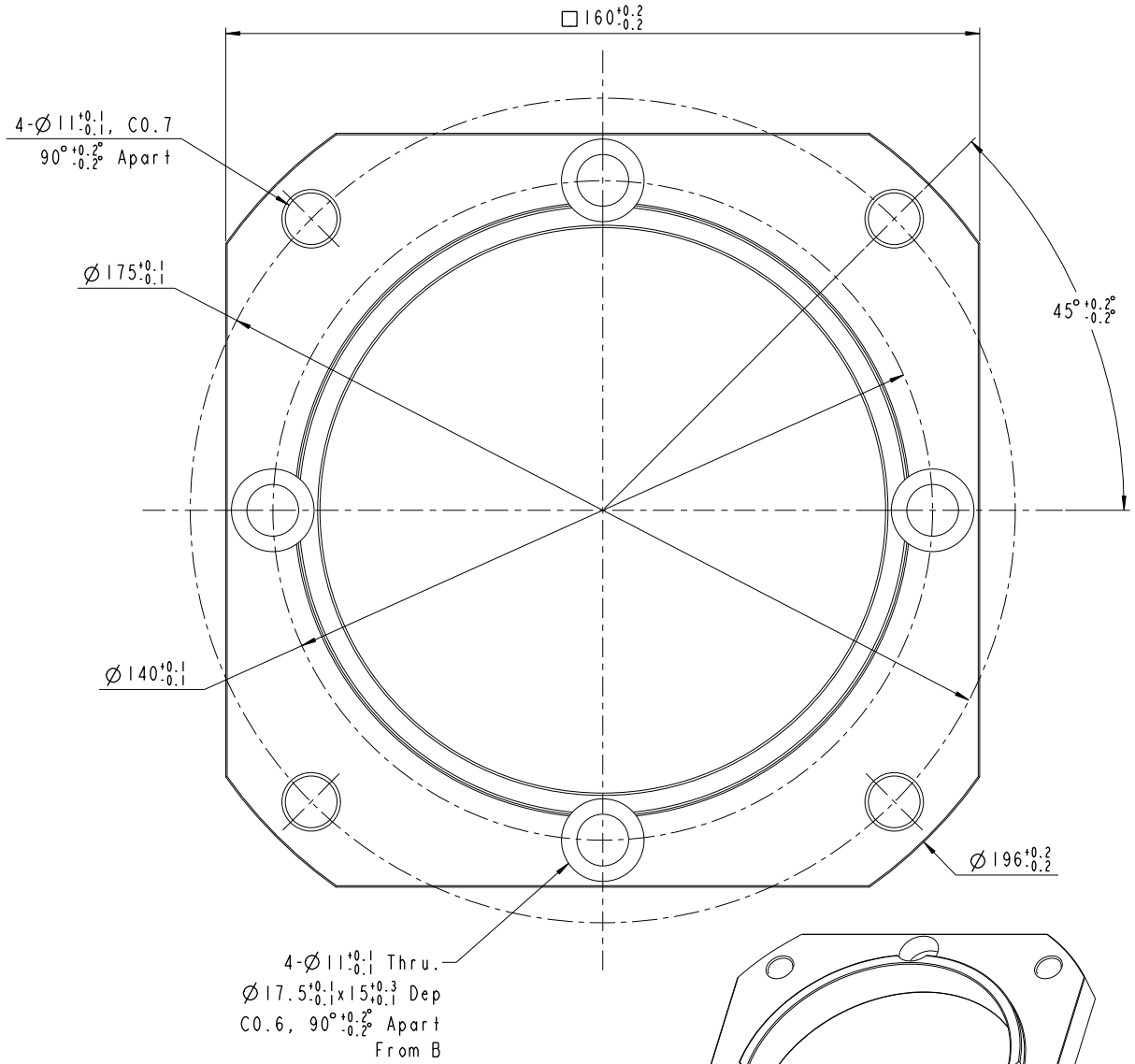

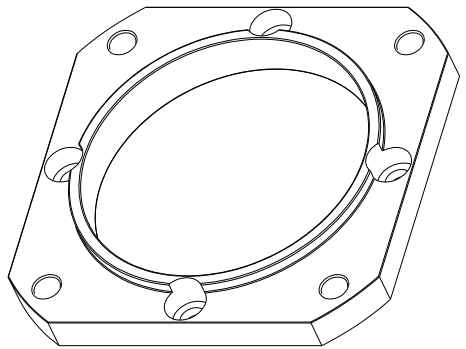

SCALE 1:2

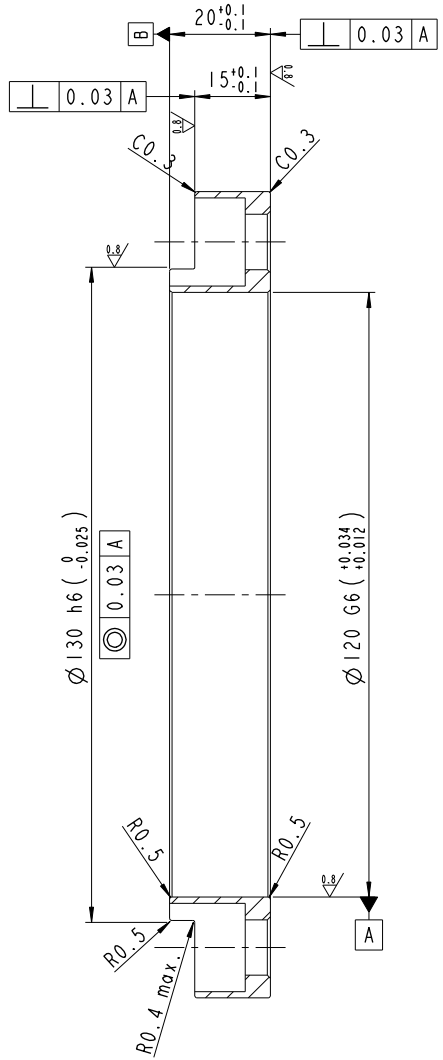

Old Part No.PF150001
Hardness 60±5 HRB
Mass= 0.517 Kg

PART NO.		APEX DYNAMICS, INC.
APPROVALS	DATE	TITLE AE155-B5
DRAWN Nadia		DWG NO. P1110500001
CHECKED		
APPROVED		SIZE A3 / SCALE 1:1 / REV