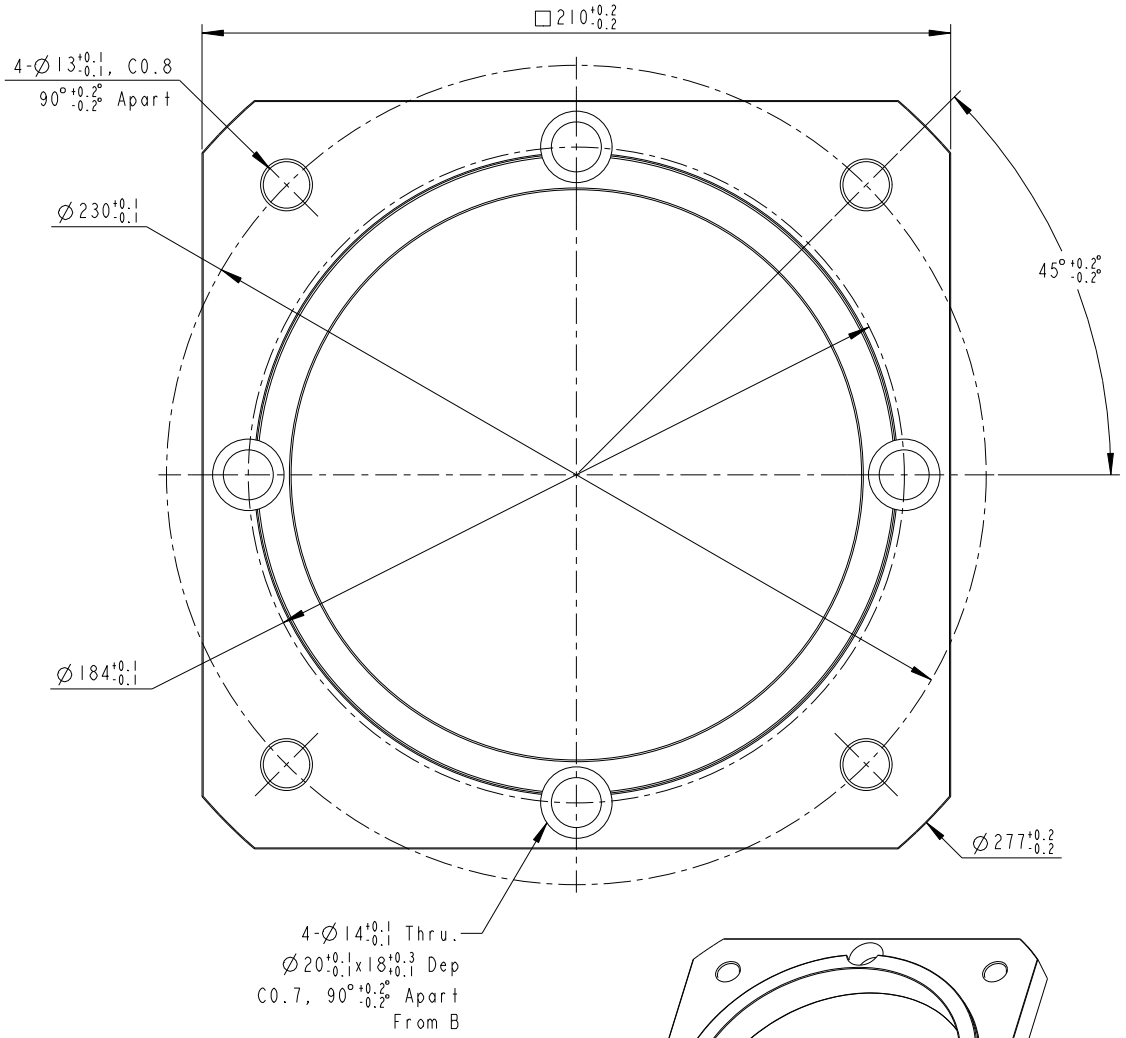

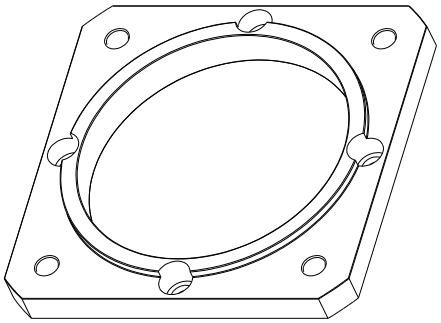

SCALE 1:2

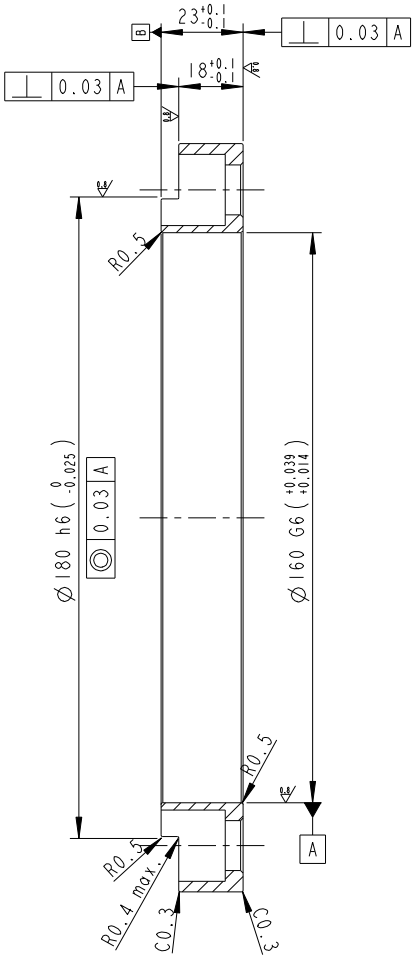

Old Part No.PF160001
Hardness 60±5 HRB
Mass= 1.133 Kg

PART NO.		APEX DYNAMICS, INC.
APPROVALS	DATE	TITLE AE205-B5
DRAWN Nadia		
CHECKED		DWG NO. P1110600001
APPROVED		SIZE A2 / SCALE 1:1 / REV